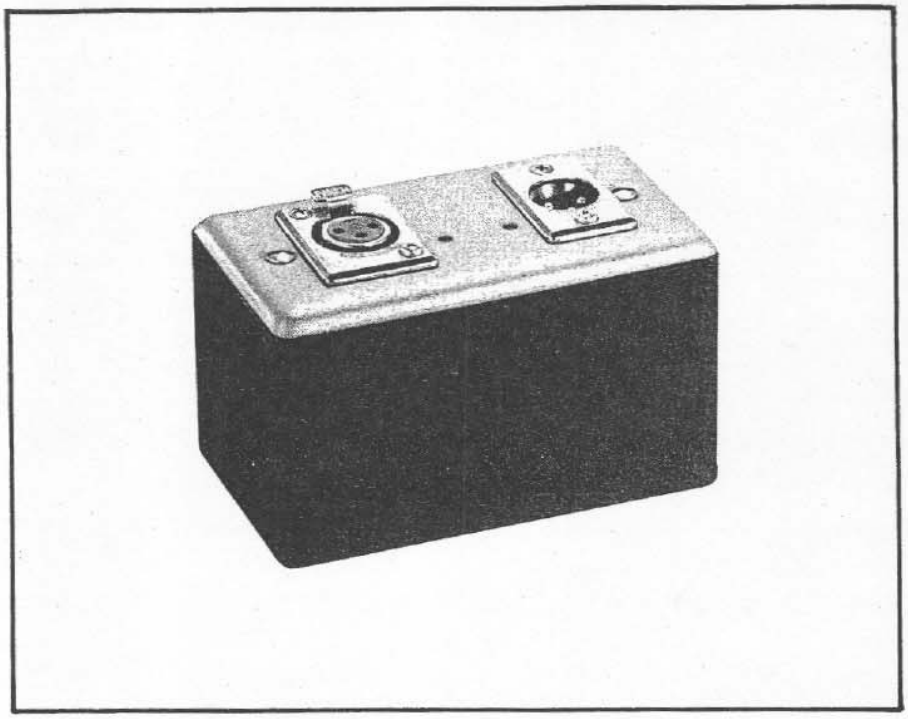

Electro-Voice®
a gulton company

Model BS9
Remote Battery Power Supply

SPECIFICATIONS

Impedance:
For use with low impedance microphones (150 ohm nominal)

Mating Connectors Required:
Switchcraft A3M or equivalent (IN)
Switchcraft A3F or equivalent (OUT)

Battery Access:
By loosening two captive screws on cover

Batteries Required:
Two (2) 9-volt alkaline cells Mallory MN1604 recommended

Battery Life:
120 hours (when used with Electro-Voice professional condenser microphones)

Case Material:
Steel and polypropylene

Finish:
Black case and fawn beige micomatt coverplate

Weight:
.54 kg (19 oz)

DESCRIPTION AND APPLICATION

The Electro-Voice Model BS9 is a battery operated remote power supply, designed to power any Electro-Voice professional condenser microphone. The BS9 requires two standard 9-volt batteries for proper operation. The BS9 may be inserted in the microphone line anywhere between the microphone and the mixer input (see Fig. 3). The BS9 will work with *any* balanced or unbalanced low impedance input. A rugged steel box nested within a durable polypropylene case provides maximum protection from normal field abuse.

OPERATING INSTRUCTIONS

To prepare the BS9 for operation, loosen the two captive screws on the cover plate, one on each side of the two Switchcraft connectors. Remove the cover plate from the BS9 housing, exposing the two battery holders fastened to the underside of the cover plate (see Fig. 1). Install two 9-volt alkaline batteries (Mallory MN1604 or equivalent), one in each battery holder. Replace the cover plate over the BS9 housing and tighten the two captive screws. The BS9 is now ready to use.

To power any Electro-Voice professional condenser microphone, connect its output via standard two-conductor shielded microphone cable to the BS9 female connector. (See Fig. 3) No pads, filters or signal conditioners of any type should be inserted between the microphone and BS9. However, due to the use of a transformer in the BS9, pads or filters, etc., may be inserted in-line between the BS9 and the mixer input. In other words, ***the output of the BS9 may be treated the same as the output from any low impedance balanced dynamic microphone.*** The output of the BS9 should be connected to the mixer input via standard 2-conductor shielded microphone cable. The microphone is now properly connected to the mixer.

To turn the BS9 off, disconnect it from the microphone line. The batteries need only be removed if the BS9 is to be stored for any prolonged length of time (to protect from battery leakage).

IN CASE OF DIFFICULTY

If the microphone fails to operate properly, check the power supply to be certain that the batteries have been installed properly. A DC volt meter may be used to confirm that voltage (+9 vdc) is appearing from pin 1 (-) to pin 2 (+) and pin 1 (-) to pin 3 (+) on the female microphone connector (D3F) on the BS9. If the batteries are installed properly and voltage does appear at the female microphone connector (D3F), a complete system check may be made by substituting a low impedance dynamic microphone for the condenser microphone. If the dynamic microphone is found to work through the existing cables and BS9 and there is the proper voltage from pins 1 to 2 and 1 to 3, then it is quite possible that the condenser microphone is at fault.

REMOTE POWER PRINCIPLES

With the low voltage requirements of today's condenser microphones, a method exists that allows the operating voltage required by the microphone to be sent down the same cable that carries the audio information from the microphone to the mixer input. This method of remote powering divides the positive side of the power supply equally between the two audio leads and connects the cable shield to the negative side of the power supply.

Because the currect flowing in each audio lead is of the same polarity and magnitude, no degradation to the audio signal is encountered. The positive voltage at the microphone is recovered thru the use of a center-tapped trans-

former. The required voltage then appears across the center tap of the transformer and the cable shield.

There are two methods of dividing the positive voltage across the audio leads at the power supply. One method uses two 6.8 k ohm 1% precision resistors bridged across the two audio leads with positive side of the power supply connected to the common ends of the resistors. This method can only be used with balanced mixer inputs *that do not have a grounded center tapped primary.* The second method of dividing voltage between the two audio leads uses a transformer with a one-to-one turns ratio with a center tapped secondary. The positive side of the power supply is connected to the center tap of the transformer, thus dividing the voltage between the two audio leads. (Fig. 2) The transformer isolates the supply voltage from the mixer input, allowing the use of the power supply with unbalanced mixer inputs. This second method of powering is employed by the BS9.

ARCHITECTS' AND ENGINEERS' SPECIFICATIONS

The supply shall be of the remote power type and shall be able to be installed "in-line" with the microphone. It shall utilize a one-to-one turns ratio, bi-filar wound, center tapped transformer. The supply shall accept and operate from two 9-volt alkaline batteries (Mallory MN1604 or equivalent). The case shall be made of polypropylene covered steel. The case shall be 10.5 cm (4.13") long, 5.4 cm (2.17") wide and 6.5 cm (2.54") high. The power supply shall have two connectors equivalent to a Switchcraft D3F and D3M. The BS9 Power Supply is specified.

WARRANTY (Limited) –

Electro-Voice Professional Broadcast, Recording, and Sound Reinforcement Microphones are guaranteed unconditionally against malfunction from any cause for a period of two years from date of original purchase. Also, these microphones are guaranteed without time limit against malfunction in the acoustic system due to defects in workmanship and materials. (Any active electronics incorporated in a microphone is guaranteed for three years from date of original purchase against such malfunction.) If such malfunction occurs, microphone will be repaired or replaced (at our option) without charge for materials or labor if delivered prepaid to the proper Electro-Voice service facility. Unit will be returned prepaid. Warranty does not cover finish, appearance items, cables, cable connectors, or switches. Defect guarantee does not cover malfunction due to abuse or operation at other than specified conditions. Repair by other than Electro-Voice or its authorized service agencies will void this guarantee.

For repair information and service locations, please write: Service Department, Electro-Voice, Inc., 600 Cecil Street, Buchanan, Michigan 49107 (Phone 616/695-6831) or 7473 Avenue 304, Visalia, CA 93277 (209/625-1330,-1).

Electro-Voice also maintains complete facilities for non-warranty service of E-V products.

Specifications subject to change without notice

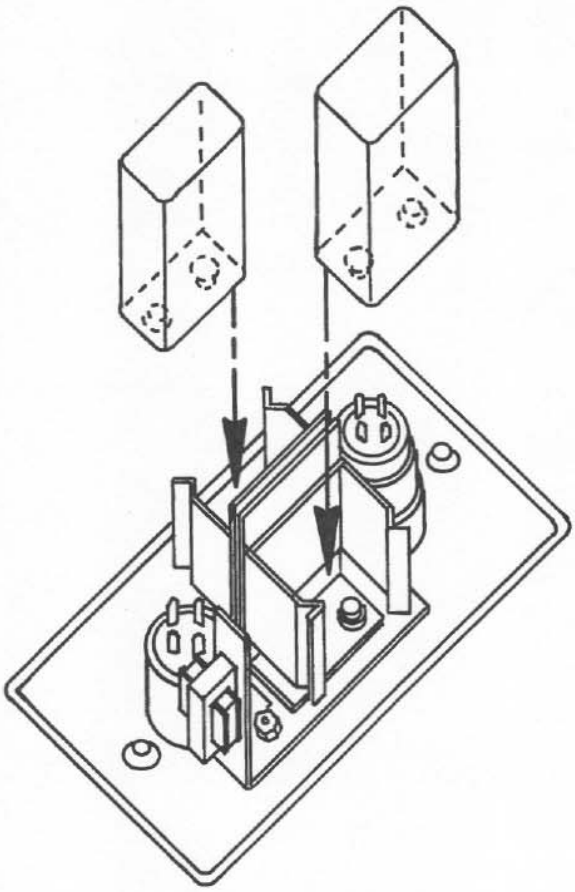

FIGURE 1 – Battery Installion

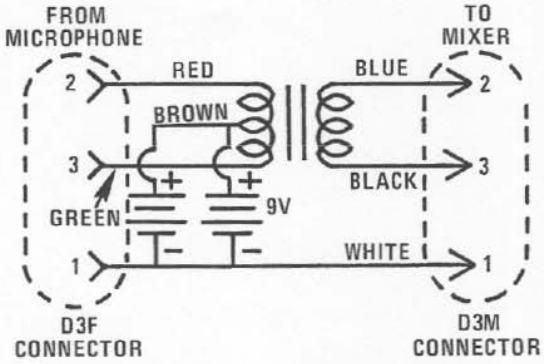

FIGURE 2 – Wiring Diagram

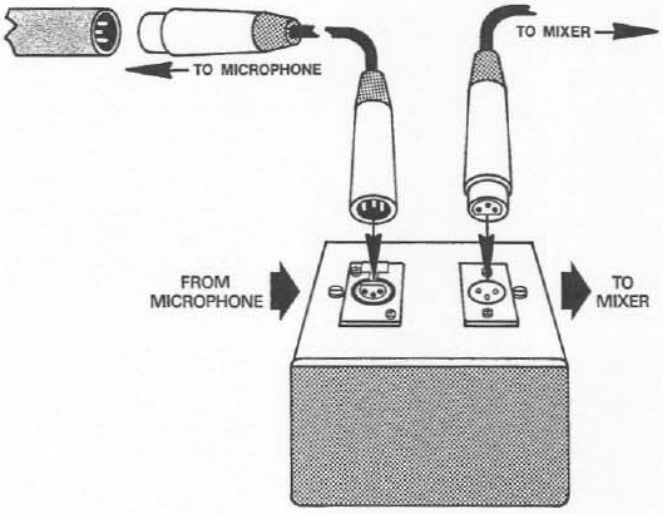

FIGURE 3 – Inserting Cable

Part Number 53242–709

a Gulton COMPANY ELECTRO-VOICE, Inc., 600 CECIL ST., BUCHANAN, MICH. 49107

MANUFACTURING PLANTS AT ■ BUCHANAN, MICH. ■ NEWPORT, TENN. ■ SEVIERVILLE, TENN. ■ GANANOQUE, ONT. ■ LITHO IN U.S.A.