BB1, BB4 BUILDING BLOCK KITS

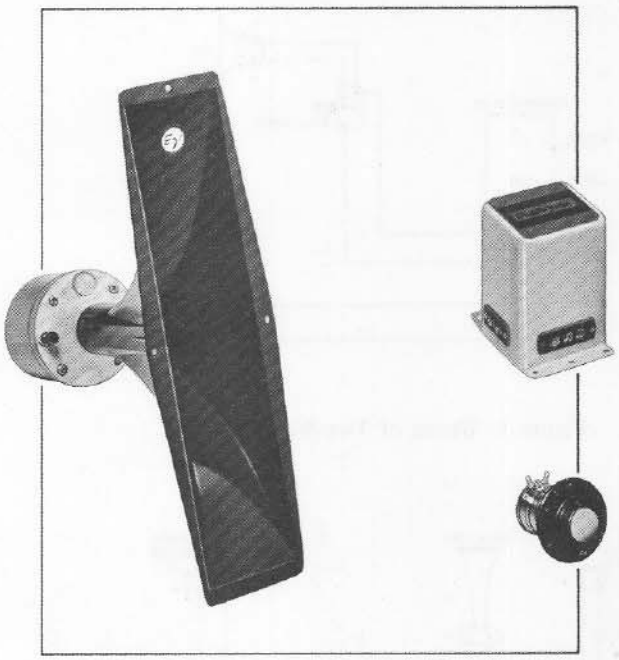

DESCRIPTION

The desire to improve the high fidelity reproduction in existing systems can now be fulfilled. With E-V Building Blocks, it is a simple matter to expand your present speaker system into a superlative two- or three-way reproducer at reasonable cost. In so doing, you divide the audio range for more efficient reproduction of each frequency section by more specialized components and vastly lower both harmonic and intermodulation distortion.

E-V Building Block Kits contain matched sets of components complete with wiring harness and instructions for each unit. Highly developed driver units with uniform response characteristics work through diffraction horns designed along the optical slit principle to give wider polar dispersion or employ specially designed cone radiators. The proper electrical crossover for each driver assembly is included along with level control. Without obsoleting any existing components, you can use the proper Electro-Voice Building Block Kit to add exciting new listening pleasure to your present system.

SPECIFICATIONS

BB1 Includes:

T35 Super-Sonax VHF Driver
X36 Crossover Network 12 db/octave
Level Control with wiring harness

BB4 Includes:

T25A Driver
8HD Diffraction Horn
X8 Crossover Network 12 db/octave
Level Control with wiring harness

30W and X1020

Although these components are not packaged together as a Building Block Kit, the addition of the 30W super woofer and the X1020 crossover to any loudspeaker system results in an astounding improvement in low-frequency range and definition. The X1020 permits crossover frequency to the existing system at either 100 or 200 Hz, and the 30W specification sheet includes instructions for building the simple enclosure required. While the many advantages of a super tweeter have been widely recognized for some time, only recently has it become possible to provide the same advantages of extended range and reduced distortion at the other end of the audible spectrum. The 30W could easily prove to be the most rewarding addition to an existing system.

"BUILDING BLOCK" METHOD

STEP 1 Basic Full-Range System	STEP 2 To complete a two-way system, add the VHF Driver	STEP 3 To complete a three-way system, add the Mid-Range Driver
SP8B SP12B SP15B	T35 (BB1)	T25A 8HD (BB4)
12TRXB 15TRXB	TRX Speakers already are provided with VHF driver	
SP12 SP15	T35 (BB1)	
12TRX 15TRX	TRX Speakers already are provided with VHF driver	

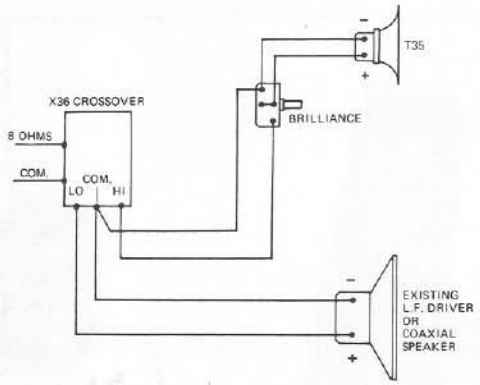

Figure 1–Wiring of Two-Way System

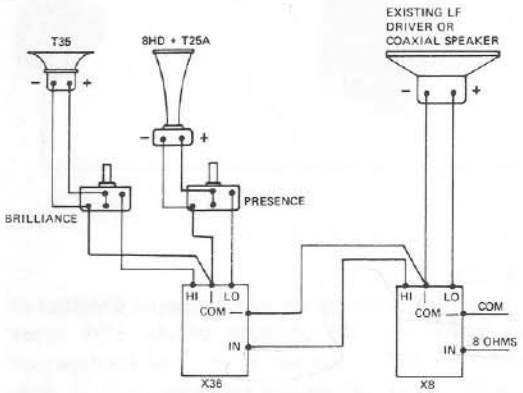

Figure 2–Wiring of Three-Way System

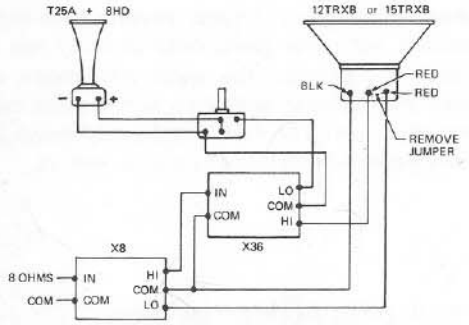

Figure 3–Addition of BB4 Mid-Range to Model 12TRXB or 15TRXB (additional X36 required)

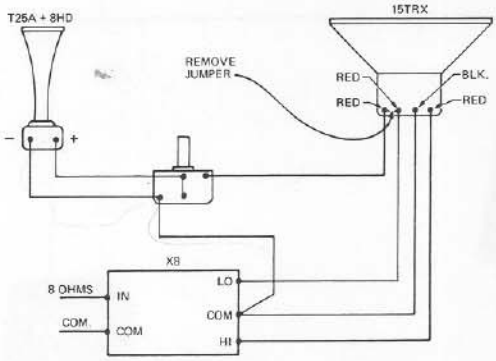

Figure 4–Addition of BB4 to Model 15TRX

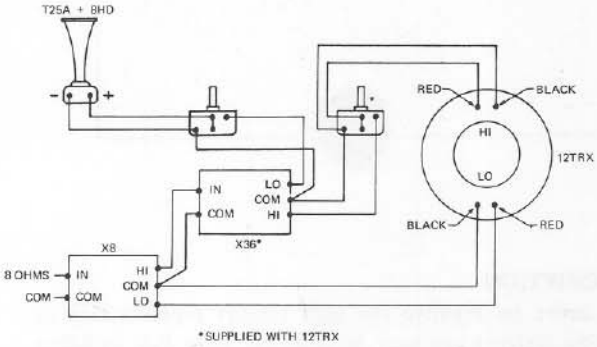

Figure 5–Addition of BB4 to Model 12TRX

BUILDING BLOCK KITS BB1, BB2, BB3, BB4, BB5

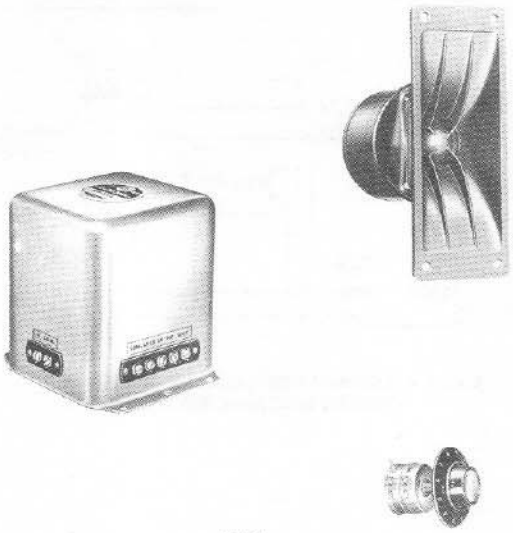

BB1

Designed to provide convenient package additions to any full-range speaker or separate 2-way system, E-V Building Block Kits contain matched sets of components complete with wiring harness and individual instruction sheets for each unit. Highly developed driver units with uniform response characteristics work through diffraction horns designed along the optical slit principle to give wider polar dispersion. The proper electrical crossover for each driver assembly is included along with wiring harness and level control. Without obsoleting any existing components, the proper Building Block Kit will add exciting new listening pleasure to your present ensemble.

SPECIFICATIONS

BB1: For use with existing 2-way systems (low-frequency driver with mid-range driver) or coaxial speakers having one-pound magnets.

Includes:

T35B	Super-Sonax VHF Driver
X36	Crossover Network
AT37	Level Control with wiring harness

BB2: For use with existing 2-way systems (low-frequency driver with mid-range driver) or coaxial speakers having three-pound magnets or greater.

Includes:

T35	Super-Sonax VHF Driver
X36	Crossover Network
AT37	Level Control with wiring harness

BB3: For use with existing 2-way systems (coaxial speakers having one-pound magnet plus VHF Driver).

Includes:

T10A	Driver
8HD	Diffraction Horn
X825	1/4-section Crossover Network
AT37	Level Control with wiring harness

BB4: For use with existing 2-way systems (coaxial speakers having three-pound magnets or greater, plus VHF Driver).

Includes:

T25A	Driver
8HD	Diffraction Horn
X8	1/2-section Crossover Network
AT37	Level Control with wiring harness

BB5: Adds very-high frequencies with wide dispersion, reserve power, extra sensitivity. For use in systems having extended bass ranges such as Patrician 700. (EIA sensitivity Rating of 50 db and higher.)

Includes:

T350	Ultra-Sonax UHF driver
X36	Crossover Network
AT37	Level Control, wiring harness

INSTALLATION

Complete installation instructions are included with each unit. For general wiring information, refer to Figures 1 through 4.

Level controls are provided for adjusting the amount of energy fed to the mid-range and/or very-high-frequency drivers in two and three-way systems. The level control connected to the mid-range driver controls that frequency range lying in the region between 800 cycles and 3500 cycles and is referred to as the "Presence" control. The control connected to the VHF Driver, called the "Brilliance" control, governs the amount of energy radiated above 3500 cycles. Generally, because of the increased efficiency of these high-range drivers, the "Brilliance" and "Presence" controls should be adjusted to a partially retarded setting. Exact positioning of these controls will depend upon room acoustics and should be adjusted for most pleasing reproduction. Rooms having heavy drapes, thick rugs, or overstuffed furniture will usually require a more advanced setting of the "Brilliance" control than normal situations. To achieve a "front row" effect, the reproduction of the mid-range driver may be enhanced by advancing the "Presence" control.

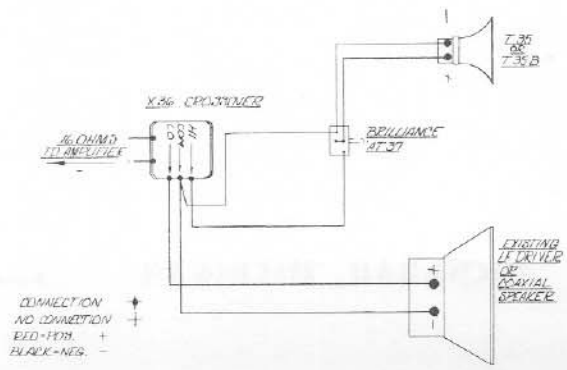

Fig. 1 - Wiring of 2-way system

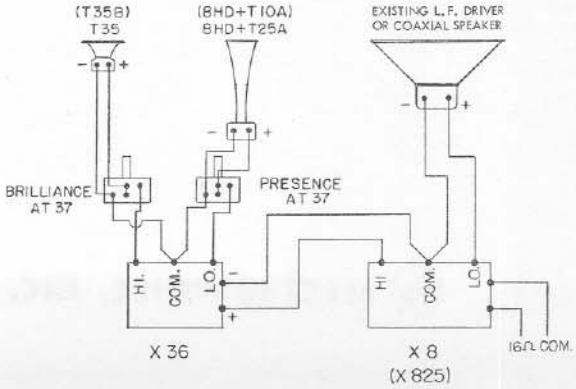

Fig. 2 - Wiring of complete 3-way system

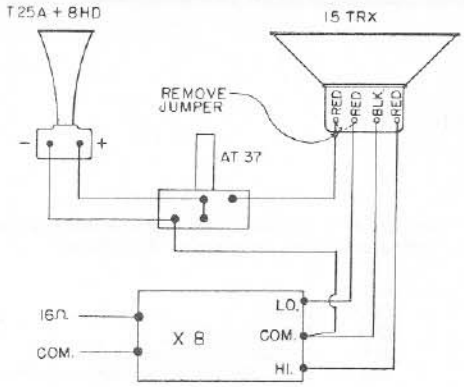

Fig. 3 - Addition of BB4 to Model 15TRX

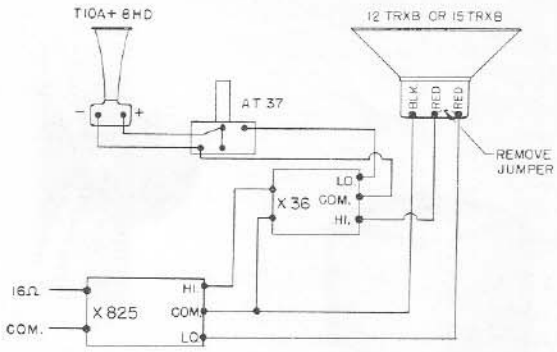

Fig. 4 - Addition of BB3 to Model 12TRXB or 15TRXB (additional X36 required)

Basic Full Range System STEP 1	To complete a 2-way system, add the VHF Driver STEP 2	To complete a 3-way system, add the Mid-Range Driver STEP 3
SP8B SP12B SP15B	T35B (BB1)	T10A/8HD (BB3)
12TRXB 15TRXB	(TRX Speakers Already Are Provided with VHF Driver)	
SP12 SP15	T35 (BB2) or T350 (BB5)	T25A/8HD (BB4)
12TRX 15TRX	(TRX Speakers Already Are Provided with VHF Driver)	