University Sound® Inc.
a MARK IV company

9000 Series
Mixer/Amp Mainframes

Product Data

Key Features

- Excellent for music and paging applications
- 6 input x mono output with EQ and master volume
- 30, 60 or 120 watt output (Models 9003, 9006, 9012)
- Plug-in modules allow custom configuration: mic or line level, unbalanced, or balanced inputs, plus FM tuner and other special modules available
- Remotely controllable master volume and two discrete mute busses
- Front-panel locking controls

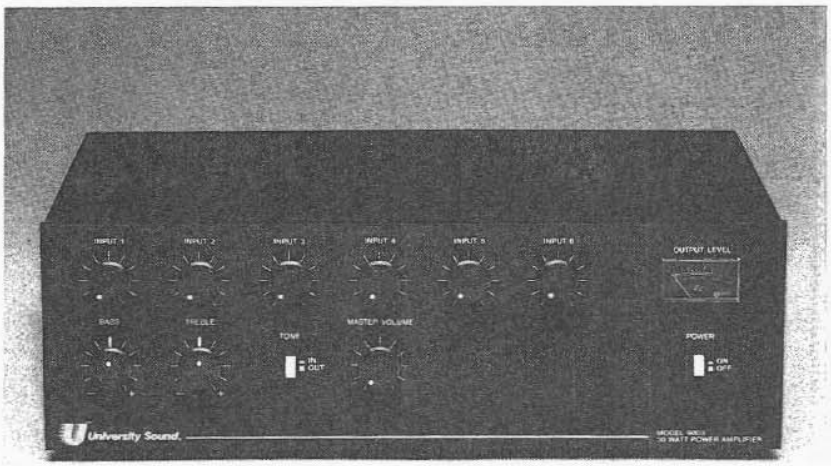

9000 Series Modular Mixer/ Power Amplifiers

Description

The University 9000-series mixer/power amplifiers provide wide frequency response, low noise, low distortion and extremely flexible user-configurable features. They are ideal for use in sound systems for churches, schools, auditoriums, business/industrial environments, background/foreground music systems and paging systems of any type.

As many as six optional modules may be installed in the ports in the rear panel. Front panel controls are used to adjust the signal level of each input and a master volume control adjusts the overall output level of the combined input signals. Bass and Treble tone controls allow tailoring of the frequency response of the unit. A front panel pushbutton switch allows defeating the tone controls (a rear panel adjustable EQ bypass control permits setting the maximum range of tone control).

Two mute busses give the user great flexibility in determining which signals should be muted when paging or when other mute-related functions are used. The mute busses are accessible via terminals located on the rear panel; bus selection is accomplished by installing or removing internal jumpers in the 9000 series modules. (See the 9000 Series Modules data sheet for details.)

A MASTER VOLUME control, combined with the OUTPUT LEVEL meter, permits ease of adjustment of the combined Input signal levels to the power amplifier for optimum output.

The power amplifier section includes thermal, dc-offset and current-limiting short-circuit protection to help prevent amplifier or speaker damage due to miswired, open or shorted speaker lines or amplifier overheating. The amplifier is muted when switched on to prevent speaker damage from "turn-on thump."

More Features

- 9003: 30-watt mixer/power amplifier with six input ports
- 9006: 60-watt mixer/power amplifier with six input ports
- 9012: 120-watt mixer/power amplifier with six input ports
- A broad range of input modules is available from University.
- A direct output from the amplifier is provided for speaker loads of 4 ohms or greater.
- Transformer-isolated amplifier outputs are provided for 25- or 70-volt constant-voltage speaker systems or 8-ohm low-impedance speakers.
- Auto-reset thermal overload protection of the power transformer
- Electronic protection circuitry and an output fuse protects both the power amplifier and speaker loads.
- An illuminated meter indicates the power amplifier output level.
- Front panel rotary control(s) are supplied standard with shaft-locks.
- Unswitched convenience outlet
- Units are rack-mountable with optional CRMB-931 bracket kit.
- Separate mixer/preamplifier and power amplifier sections allow insertion of external signal processing devices into the mixer/amplifier signal chain.
- True shelving-type tone controls with a defeat switch and rear-panel adjustable EQ bypass control
- Switchable low pass filter
- Bridging input/output allows interconnection of mix-busses of mixer/preamplifier sections of multiple units.
- Two separate mute busses allow flexible control of the mute functions for the installed input modules.
- Remote-controllable VCA (voltage-controlled amplifier) following the mixer/preamplifier section allows remote volume control or limitation of the maximum range of the front panel master volume control.
- Two independent signal-processing busses for mic- and line-level input modules

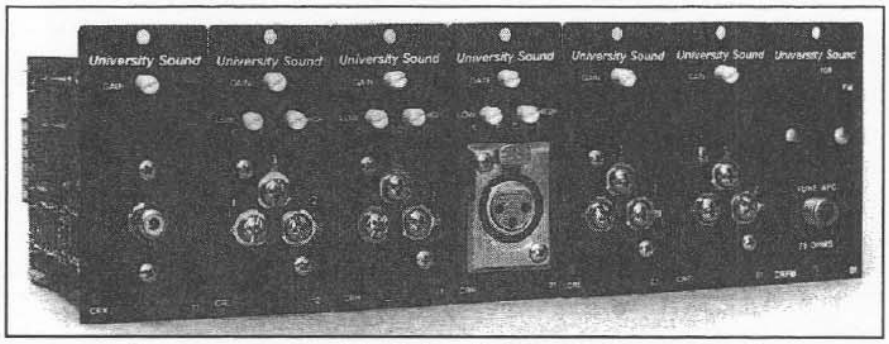

Representative Modules (9003, 9006 or 9012)

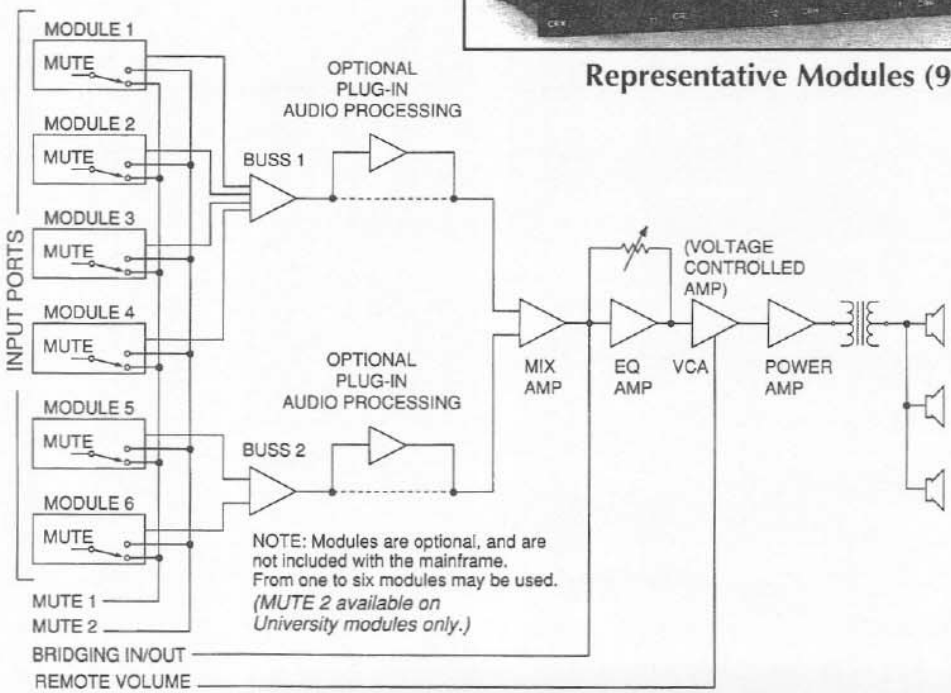

University 9000 Series Mixer/Amp Mainframe Block Diagram

Specifications

Power Output

9003:	30 watts RMS
9006:	60 watts RMS
9012:	120 watts RMS

Total Harmonic Distortion at Rated Output (1 kHz)
Less than 0.02%

Power Bandwidth (±1 dB at less than 0.5% THD)
Direct, 20 ~ 20,000 Hz; Transformer: 50 ~ 20,000 Hz

Frequency Response
20 Hz ~ 20,000 Hz, ±1 dB (direct)
20 Hz ~ 15,000 Hz, ±1 dB (transformer)
20 Hz ~ 20,000 Hz, +1/–3 dB (transformer)

Tone Controls

Bass:	±10 dB at 100 Hz (shelving)
Treble:	±10 dB at 10,000 Hz (shelving)

Signal/Noise Ratio (tone ctrls. defeated, 20–20k Hz)

Master (at max):	77dB
Master (at min):	90 dB
Power amp only:	100 dB

Input Sensitivity / Impedance

Input Port/Program:	100 mV / 10,000 ohms
Bridging:	100 mV / 3,300 ohms
Power Amp:	1 V / 10,000 ohms

Output Level / Impedance

Preamp:	1 V / 600 ohms
Aux:	1V / 10,000 ohms
Transformer:	25 V, 70 V, 8 ohms
Direct:	4 ohms

Output Regulation

Transformer Out:	1.0 dB, no load to full load
Direct Output:	0.5 dB, no load to full load

Protection

Amplifier:	Short-circuit current limited, thermal cut-out
Load:	DC offset, turn-on/turn-off transients (delay), output fuse
Transformer:	Auto-reset thermal protection
Mainframe:	AC line fuse

Front Panel Controls (rotary controls lockable)
Input Level (x 6), Bass, Treble, Tone Defeat (pushbutton switch), Master Volume, Power On/Off (pushbutton switch)

Front Panel Indicators
Output Level Meter (illuminated when power is on)

Rear Panel Controls
Preamp Out/Power Amp In Link Switch, Lo-cut (60 Hz, 6 dB/octave), EQ Bypass (variable)

Rear Panel Connectors

Input Ports 1 – 6:	Card edge connector (for modules)
Preamp out:	RCA phono jack
Aux Out:	RCA phono jack
Power Amp In:	RCA phono jack
Bridging In/Out:	RCA phono jack
Mute:	Screw terminals
Remote VCA:	Screw terminals
Speakers:	7 screw terminals on barrier strip (ground, 4 ohms, output transformer in, common, 8 ohms, 25 V, 70 V)
AC Outlet:	Unswitched, 120V, 5A maximum
Chassis Gnd:	Grounding post

Fuses (250V, 3AG)

9003:	Output, 5A;	Line, 3A
9006:	Output, 5A;	Line, 3A
9012:	Output, 10A;	Line, 5A

Power Requirements

9003:	120 V AC, 60 Hz, 60 watts
9006:	120 V AC, 60 Hz, 100 watts
9012:	120 V AC, 60 Hz, 180 watts

Operating Temperature Range
–10°C to +60°C (+12°F to +140°F)

Dimensions

Height:	13.2 cm (5.2 inch) without feet 14.5 cm (5.7 inch) with feet
Width:	42.0 cm (16.5 inch)
Depth:	31.5 cm (12.4 inch)

Weight

9003:	9.1 kg (20 pounds)
9006:	11.8 kg (26 pounds)
9012:	15.4 kg (34 pounds)

Finish
Black painted steel chassis; black anodized, brushed aluminum front panel with white graphics

Front Panel — **Rear Panel**

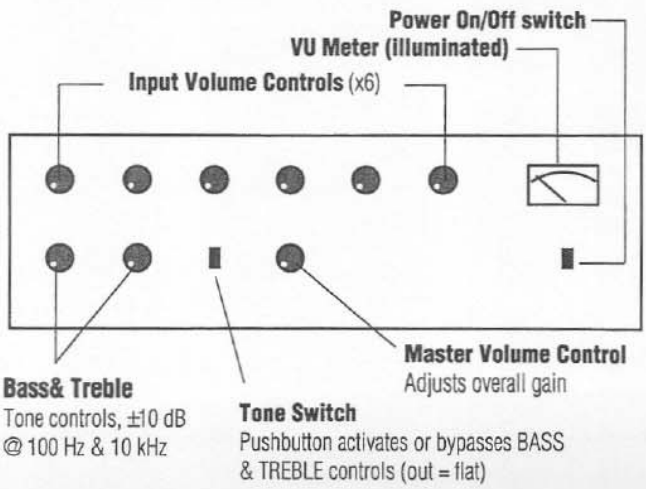

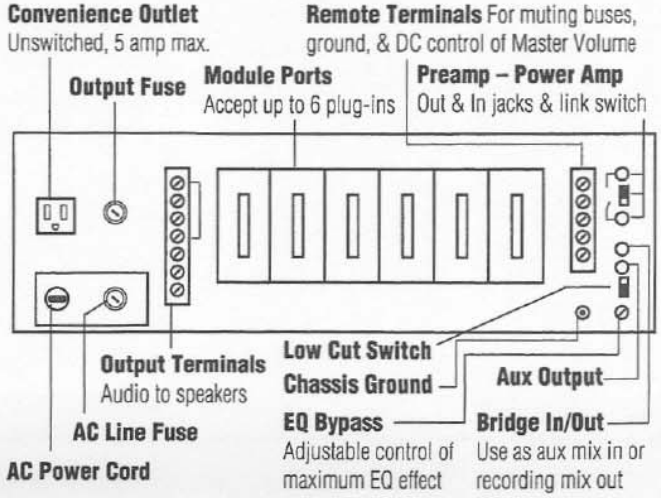

Architects' and Engineers' Specifications

The unit shall comprise an integral single-channel power amplifier with a six (6) channel mixer packaged in a single free standing chassis which may also be mounted in a 3-unit high x 19-inch wide standard EIA equipment rack space. The amplifier section shall be capable of delivering (30, 60 or 120) watts continuous average sine wave power, directly coupled into a 4 ohm load. Transformer coupled outputs shall also be included for driving 8 ohm, 25 volt or 70.7 volt loudspeaker loads. The amplifier outputs shall be connected to the load via a screw terminal strip. Total harmonic distortion at rated output shall be less than 0.02% at 1 kHz. The direct output frequency response shall be within a tolerance of ±1 dB from 20 Hz to 20 kHz. The transformer output frequency response shall be within ±1 dB from 20 Hz to 15 kHz, or +1, -3 dB from 20 Hz to 20 kHz. The amplifier shall be provided with current limiting circuitry for short circuit protection, an automatically resetting thermal breaker on the power transformer, and fuses for both the output and the AC line.

The construction shall allow for optional plug-in input modules of varying functions, each having a nominal dimension of 3.07 inches high by 1.38 inches wide by 3.10 inches deep and a dual 6-pin edge connector for 24 V DC power input as well as audio and control connections. Various modules shall be available with active balanced input circuitry or transformer isolated input circuitry. There shall be two independent muting busses, and plug-in jumpers shall enable either or both busses for any given module (where applicable).

The rear panel shall include a switch to connect the preamp to the power amp, or to allow the signals to be routed through an external processor, mixer, etc. It shall also include an in–out switch for a built-in 60 Hz, 6 dB/octave low cut filter, and a continuously adjustable control to set the maximum depth of the equalization (tone controls). There shall also be terminals for remote control of the two muting busses, allowing for independent muting control from two different places of appropriately equipped input modules. Remote control of the master volume shall also be possible, via an external resistor.

With tone controls defeated, the overall preamp/power amp signal-to-noise ratio shall be at least 77 dB (master at maximum), 90 dB (master at minimum), or 100 dB S/N for the power amp only. The standard input ports (card connectors for the input modules) shall be rated at nominal 100 mV sensitivity and 10 kohm input impedance. A bridging input/output phono jack shall be provided for linking two mixer/amplifier units, shall have nominal 100 mV sensitivity, and 3.3 kohm nominal impedance. The power amp input shall be rated at 1 volt sensitivity (to drive it to rated power), with 10 kohm impedance. The preamp and aux outputs shall be phono jacks rated at 1 volt nominal level, having 600 ohm and 10 kohm nominal impedance respectively.

Operating temperature range shall be from –10°C to +60°C (+12°F to +140°F). The power line requirements shall be 120 volts AC, 60 Hz, at 60 watts max. (30 watt model) or 100 watts max. (60 watt model) or 180 watts max. (120 watt model). The dimensions of the unit shall be as follows: 5.2 inches (13.2 cm) high without feet, 5.7 inches (14.5 cm) with feet, 16.5 inches (42.0 cm) wide, 12.4 inches (31.5 cm) deep. The unit shall have a black painted steel chassis, and a black anodized and brushed aluminum front panel with white nomenclature. The mixer/amplifier shall be a University Model 9003 (30 watt), Model 9006 (60 watt) or Model 9012 (120 watt).

University Sound® Inc.™
a MARK IV company
13278 Ralston Street
Sylmar, California 91342-7607
FAX (818) 367-5292
PHONE (818) 362-9516

Part Number 201-9000-00
Litho in U.S.A.