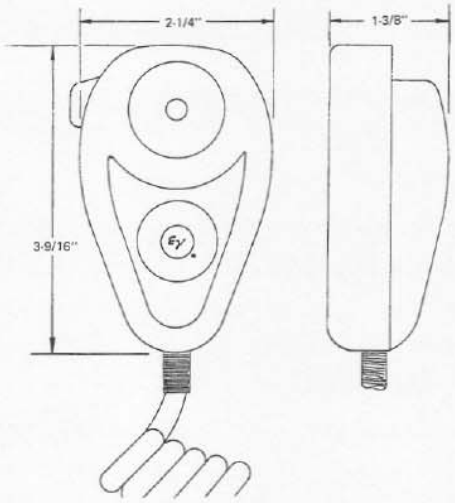

DIMENSION DRAWING

DESCRIPTION AND APPLICATIONS

The Model 603T is a hand-held dynamic microphone, designed for high articulation speech transmission under high ambient noise. The 603T is the result of continuous study of the needs of the communications industry and it uniquely meets the specialized requirements of airline, two-way radio and industrial applications. The 603T is a transistorized pressure gradient microphone utilizing two sound entrances for reduction of interfering ambient noise. Stated simply, if sound pressure and phase are reasonably identical at both sound entrances, cancellation occurs. If, however, the sound originates in close proximity to one sound entrance (i.e. ¼ - ½ inch) and more distant to the other sound entrance, then a pressure and phase differential will exist and little cancellation will occur. The 603T is unexcelled at discriminating between near and distant sounds for maximum ambient noise rejection.

The compact two-stage transistor amplifier is specially stabilized and will operate uniformly from +158° F down to - 40° F. Output of the transistor amplifier is designed to plug directly into inputs designed for carbon microphones. The internal potentiometer allows the output level to be adjusted, using a jeweler's screwdriver, thus precisely controlling output to the transmitter. The 603T provides extremely reliable, crisp, clear speech reproduction with high sensitivity and low distortion.

*603TRA is identical to 603T except it is equipped with a right angle plug.

SPECIFICATIONS

Type:	Transistorized dynamic
Frequency Response:	200 to 4,000 Hz
Impedance:	Matches 100 to 500 ohm carbon input
Polar Pattern:	Pressure gradient (Differential close-talking)
Output Level:	Adjustable up to –44 dB with normal speech ¼" from front of microphone (0 dB = 1 volt/dyne/cm2)
Case Material:	High impact phenolic
Finish:	Black
Amplifier Gain:	48 dB
Current Drain:	22 ma at 14 volts
Rated Supply Voltage:	24 volts nominal (14 to 19 volts)
Minimum Operating Voltage	3.5 V DC at microphone
Maximum Undistorted Output:	4.0 (with 24 v supply and 250 ohm load)
Dimensions:	2¼" W x 3-9/16" H x 1-3/8" D
Net Weight:	7½ ounces
Connector:	PJ-068 commercial equivalent
Cable:	3 or 4 conductor coiled cord, 5' extended
Switch:	DPST wiping contact leaf switch
Accessories Available:	Microphone holder
Temperature Range:	–40°C (–40°F) to +70°C (+158°F)
FAA Approval:	TSO-C58

OVERHAUL INSTRUCTIONS

1. **Special Tools.** None

2. **Disassembly.** (See Figure 8)
   a. Begin disassembly by removing the four screws holding the case back.
   b. Do not remove the head subassembly unless it is necessary to replace the head. If it is necessary to replace this component, proceed as indicated in steps c and d.
   c. With an eyedropper, feed Esso Solvent No. 1 at the sides and bottom of the head assembly. Allow the solvent time to dissolve cement holding head to front case. Then gently pry the head assembly loose, using a screwdriver.
   d. With the head assembly removed, it is possible to unsolder all leads and replace the head.
   e. The switch assembly should be disassembled carefully.
   f. Do not unsolder leads to switch unless necessary for replacement of cable.

3. **Cleaning:**
   a. Thoroughly clean all dust and dirt from microphone by first using dry, compressed air to dislodge dirt from inaccessible corners. Then clean each part with a lint-free cloth or brush, slightly dampened with dry cleaning solvent, Federal Specification P-S-661. **Do not get solvent on head diaphragm.**
   b. Remove pits from switch contacts by burnishing.

4. **Inspection:**
   a. Inspect switch contacts for signs of excessive wear.
   b. Examine unit for damaged or dried-out wiring or sleeving. Check all soldering connections for good contacts.
   c. Check cable for signs of damage such as cuts or cracks.

5. **Repair and Replacement:**
   a. Replace any part which is damaged.
   b. Check resistance across the head with an ohmmeter. It should be about 25 ohms. In addition, a distinct click from the microphone element should be heard when the circuit to the ohmmeter is made or interrupted. If it is not, replace head as described in the reassembly procedure.

6. **Lubrication:** Clean and add small drop of light machine oil to each end of switch actuator spring.

7. **Reassembly:**
   a. Reassembly is the reverse of disassembly, noting special instructions given below:
   b. If the head assembly was removed, proceed to install it as follows:
   c. Apply a film of Minnesota Mining and Manufacturing Cement EC871 to the four edges on the raised portion of the front cover of the microphone head.

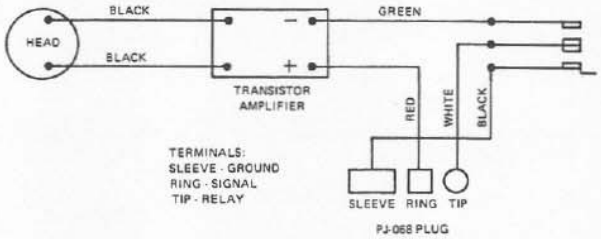

FIGURE 1 – Wiring Diagram (603-2107)

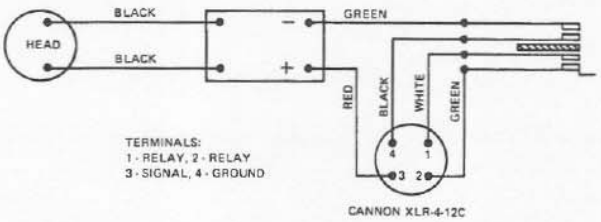

FIGURE 2 – Wiring Diagram (603-2342)

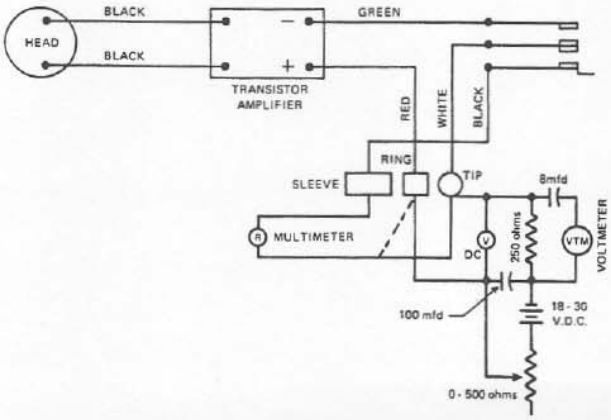

FIGURE 3 – Test Set-up (603-2107)

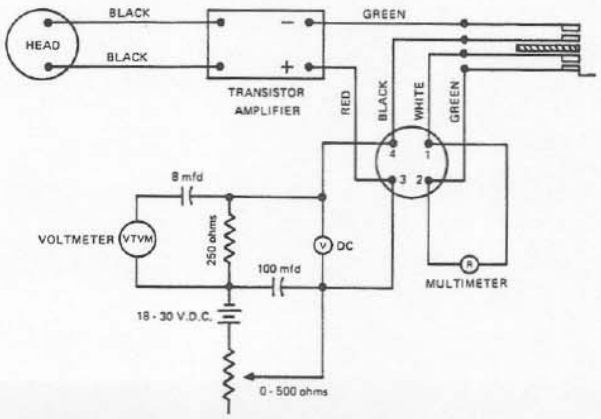

FIGURE 4 – Test Set-up (603-2342)

d. When the cement is tacky, mount head in place inside the front case. Allow cement to dry for about 10 minutes. Solder the leads in place across the head.

8. **Test Procedure** (See Figure 1 or Figure 2)

9. **Check of Switch Operation:** (4 wire connection) Check the operation of the switch as follows:
   a. With the switch released, check the resistance between the white and green leads. It should be infinite.
   b. Check the resistance between the red and black leads. It should be infinite.
   c. Depress switch and check resistance between white and green leads. It should be zero.
   d. Depress switch and check resistance between red and black leads. It should be from 1000 to 10,000 ohms depending on meter polarity.

10. **Check of Switch Operation:** (3 wire connection) Check the operation of the switch as follows:
   a. With the switch released, check the resistance between the black and white leads. It should be infinite.
   b. Check the resistance between the black and red leads. It should be infinite.
   c. Depress switch and check resistance between black and white leads. It should be zero.
   d. Depress switch and check resistance between black and red leads. It should be about 1000 to 10,000 ohms depending on meter polarity.

11. **Check of Microphone Output.** The best procedure for testing the microphone is to compare its output with one known to be operating properly, using the test set-up shown in Figure 3, or Figure 4. Check the output voltage as follows:
   a. Depress microphone switch and adjust voltage to obtain 12 to 14 volts on DC meter.
   b. Hold the test microphone about one-quarter inch from the mouth and talk at normal speech level with microphone switch depressed. An output of about 0.031 volt should be obtained.

WARRANTY (Limited) – Electro-Voice aircraft microphones and accessories are guaranteed for **twenty-four (24) months** from date of original purchase against malfunction due to defects in workmanship and materials. If such malfunction occurs, microphone will be repaired or replaced (at our option) without charge for materials or labor if delivered prepaid to the proper Electro-Voice service facility. Unit will be returned prepaid. Warranty does not cover finish, appearance items, cables, cable connectors, or switches and does not cover malfunction due to abuse or operation at other than specified conditions. Repair by other than Electro-Voice or its authorized service agencies will void this guarantee.

For correct shipping address, instructions on return of Electro-Voice products for repair, and locations of authorized service agencies, please write: Service Department, Electro-Voice, Inc., 600 Cecil Street, Buchanan, Michigan 49107 (Phone 616/695-6831).

Electro-Voice also maintains complete facilities for non-warranty service of E-V products.

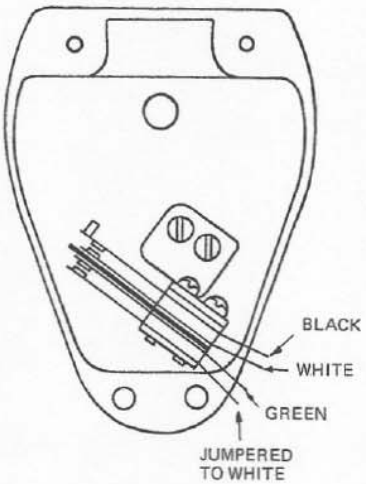

FIGURE 5 – Case Back (3 wire connection)

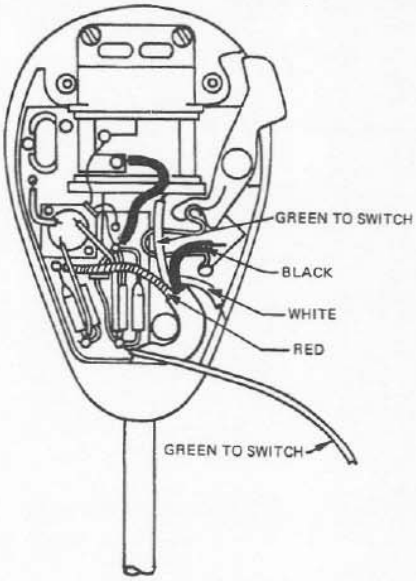

FIGURE 6 – Case Front

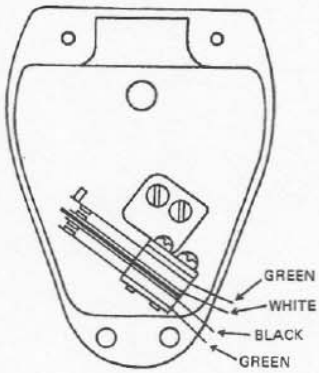

FIGURE 7 – Case Back (4 wire connectior

Specifications subject to change without notice.

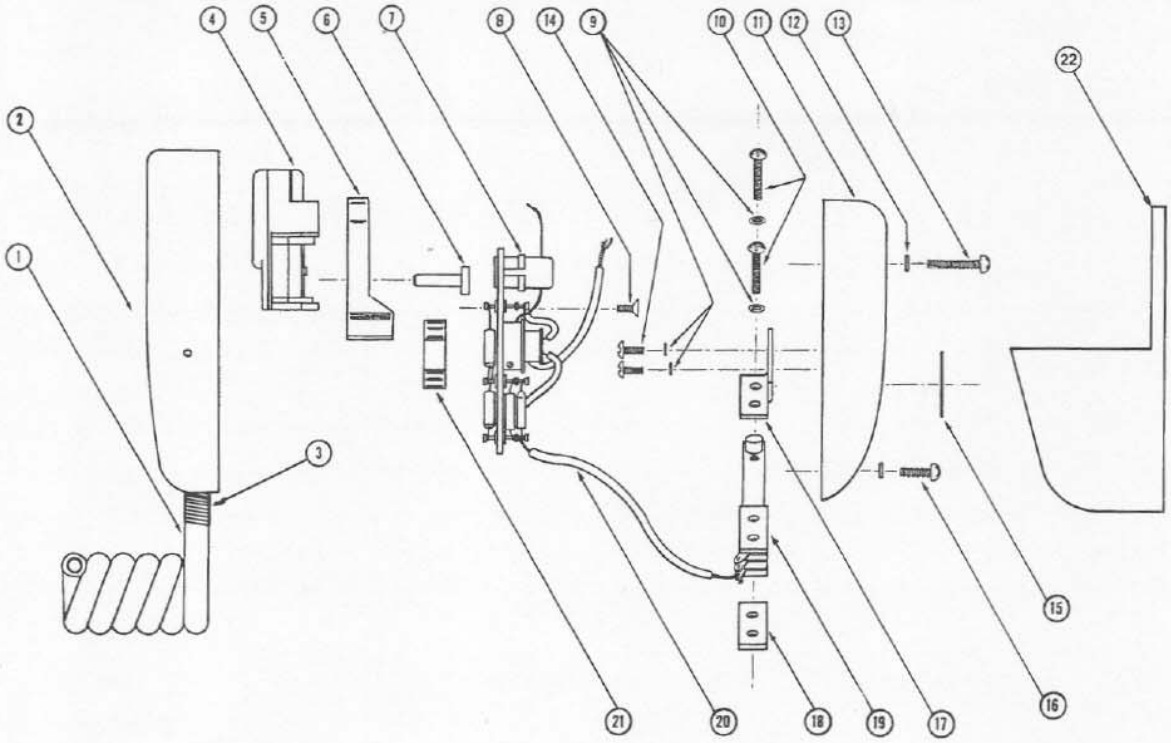

FIGURE 8 – Model 603T Assembly

SPARE PARTS LIST MODEL 603-2107, 603-2342

FIG. NO.	QUANT. USED	PART NO.	NOMENCLATURE
1	1	83399	Cable subassembly XLR-4-12C (603-2342)
	1	87134	Cable subassembly PJ-068 plug (603-2107)
2	1	87461	Front case, nameplate S/A
3	1	19057	Spring flex relief
4	1	613-2108	Microphone head
5	1	A75379	Actuator
6	1	20417-AD	Drive pin, actuator
7	1	8360	Amplifier, subassembly
8	1	C60023-AD	Screw, 2-56 x 3/16" fl. hd. Phillips steel
9	4	4067-CC	Lockwasher, No. 3
10	2	B60128-AD	Screw, 3-48 x ½" rd. hd. Phil. stl.
11	1	A75378	Case, back
12	4	A4084-BK	Lockwasher, No. 4 stl.
13	2	B603210-BL	Screw, 4-40 x 5/8 rd. hd. Phil. stl.
14	2	E60023-AD	Screw, 2-56 x 3/16 bd. hd. Phil., stl.
15	1	A48243	Nameplate
16	2	B60326-BL	Screw, 4-40 x 3/8" rd. hd. Phil. stl.
17	1	73335-AD	Bracket, switch
18	1	7505-AD	Plate, switch
19	1	56016	Switch, leaf (4 terminal)
20	1	1612-12	Wire, No. 27, stranded, 2" green
21	1	1975-AD	Spring, actuator
22	1	B73419-UP	Bracket (without magnet)

Part Number 535781 – 913
a Gulton COMPANY ELECTRO-VOICE, Inc., 600 CECIL ST., BUCHANAN, MICH. 49107
MANUFACTURING PLANTS AT ■ BUCHANAN, MICH. ■ NEWPORT, TENN. ■ SEVIERVILLE, TENN. ■ GANANOQUE, ONT. ■ LITHO IN U.S.A.