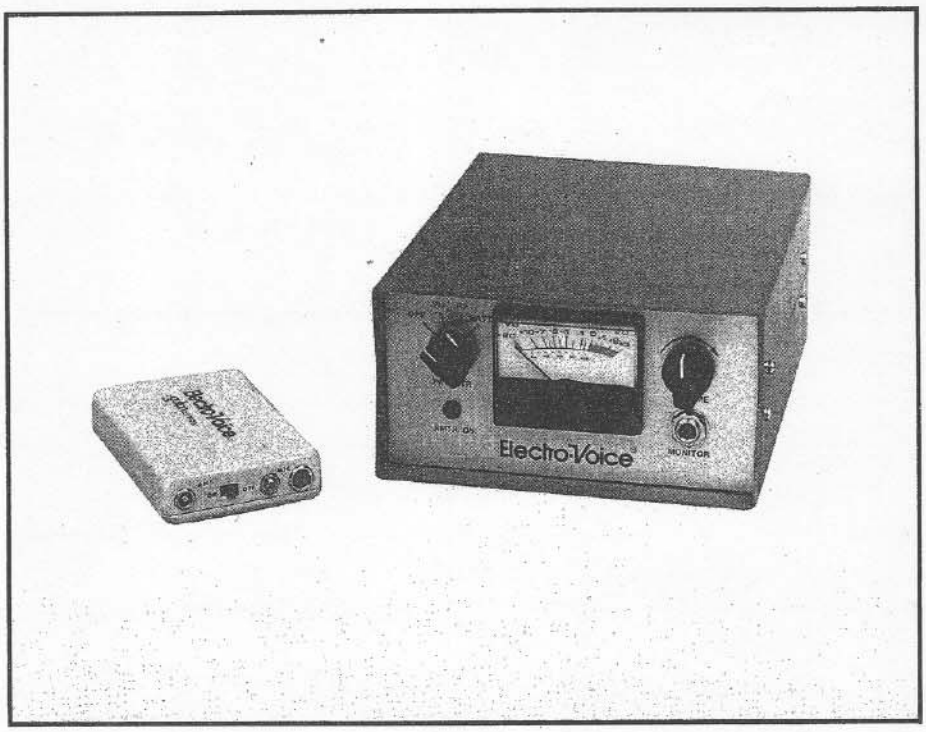

Electro-Voice®
a gulton company

Model 221/121 Wireless Microphone System

SPECIFICATIONS

OVERALL SYSTEM

Frequency Response
± 2 dB, 100Hz-12 kHz
(6 dB down @ 50 Hz)

S/N Ratio
Better than 60 dB

Distortion
Less than 1% THD

R.F. Carrier Frequency
150-210 MHz

Frequency Stability
0.005% (crystal controlled)

Modulation
± 10 kHz deviation FM

Operating Temperature
0 to + 40 degree C
(32 - 104 degree F)

Operating Range
100 ft. under typical adverse conditions
2000 ft. line of sight

TRANSMITTER

R.F. Power Output (into 50 ohms)
Switchable, Low Pwr. Mode - 50 mw
High Pwr. Mode - 100 mw

R.F. Output Impedance
50 ohms

Radiated Harmonic & Spurious Emissions
Less than -40 dB

Modulation Limiter
Compressor activates @ 100% modulation.
40 dB range

Modulation Indicator
LED activates @ 100% modulation

Audio Input
Switchable, low Z dynamic microphone -40 to -65 dBm or Electret compatible with switchable DC BIAS for Electret microphone

Antenna
45.7 cm (18 in) Flexible Wire

Connectors
Antenna
Coaxial Lemo Quick-Lok
Microphone
Lemo 2 pin Quick-Lok in parallel with a Micro-jack (TR2A)

Controls
On/Off switch, Internal Mike level adjust

Battery
Mallory MN1604

Battery Life
8 hrs. nominal (low pwr. mode)

Dimensions
L x W x H 10.2 x 6.4 x 2 cm
(4 x 2.5 x .8 inches)

Weight
14.2 grams (5 oz) — w/o battery

RECEIVER

R.F. Sensitivity
1. uV for 30 dB quieting

Capture Ratio
1.5 dB

Image Rejection
Better than -65 dB

Antenna Input Impedance
50 ohms

Squelch Treshold
Set @ 0.8 uV (adjustable)

IF Selectivity
Ceramic Filter

Audio Outputs

Line Level Balanced,
Output impedance, 600 ohms.
Output level @ 0 VU =
0 dBm w/10 dB of headroom

Mike Level Balanced,
Output impedance, 200 ohms.
Output level -52 dBm w/10 dB of headroom

Monitor output unbalanced,
Output impedance, 8 ohms.
Maximum output level .3 watts

Power Requirements
115 VAC/50-60 Hz, External 10-30 VDC or optional internal rechargeable Ni-Cad Batteries

Accessory Connector Input/Outputs
Diversity sense-out, Ext 10-30 VDC in, Regulated 7.5 VDC out.
Balanced Audio out.

Dimensions
L x W x H
17.8 x 14.6 x 7.6 cm
(7.0 x 5.75 x 3 in)

Weight
1.13 kg (2 lbs 8 oz) w/o batteries

Accessories Furnished
79993 Transmitter Antenna
17249 Transmitter Audio Connector
79994 Receiver Antenna
17258 Receiver Accessory Connector
16601 Receiver Power Cord

Optional Accessories
20229 Internal Battery Holder
20230 Set of Rechargeable Batteries

TRANSMITTER

The Electro-Voice Model 221 transmitter is designed to be worn by the performing talent. Slipped in a shirt pocket, clipped to a belt or even taped to the performer's body, the 221 is designed to provide a reliable alternative to the standard microphone cable. The 221 will accept a dynamic microphone for handheld or other applications, or a miniature electret condenser microphone when microphone concealment is a concern. The transmitter will also provide a bias voltage for the electret microphone, eliminating the need for a separate microphone battery. The microphone input connector, a two pin Lemo Quick-Lok, in parallel with a one-eighth inch diameter micro jack can be switched via a jumper on the transmitter circuit board to accept and provide power for an electret mike such as the Electro-Voice CO85, Sony ECM50, etc., or accept a standard low impedance dynamic microphone. The 221 transmitter has a modulation indicator (an LED) that begins to illuminate just as the transmitter achieves 100% modulation and the audio compressor begins to function. The internal volume control for the microphone should be adjusted so that the LED modulation indicator only flashes briefly during the loudest passages in the dialogue. This adjustment allows signal-to-noise ratio and dynamic range to be optimized. The compressor circuit, not a limiter, provides greater than 40 dB of compression without an audible increase in distortion. A nine volt alkaline transistor radio battery is required to power the 221 transmitter. Under normal operating conditions, the battery will have a nominal life of eight hours. For professional applications, a fresh battery should be installed in the transmitter before each performance in order to ensure reliable operation.

The radiated output power of the 221 transmitter is switchable, via a jumper on the printed circuit board, between 50 milliwatts and 100 milliwatts output. The radiated 50 milliwatt output of the 221 is greater than any other wireless microphone transmitter in its class. Under the most adverse conditions or where extended range is desired, the jumper on the PC board can be moved to increase the radiated output power of the transmitter to 100 milliwatts. The increased power output of the transmitter increases the current drain on the battery, reducing its nominal life to five hours. An eighteen inch flexible antenna is fastened to the 221 by a coaxial Lemo Quick-Lok connector, providing a reliable mechanical and electrical connection. The structural and mechanical integrity of the transmitter housing is maintained through the use of a diagonally sectioned drawn aluminum case. The glass epoxy PC board is held securely in place by a formed metal shield and is shock mounted.

RECEIVER

The Electro-Voice Model 121 receiver is designed specifically for use with the 221 transmitter. The receiver is required to operate only on one frequency band, allowing the use of an RF preselector. The preselector in the 221 is a double tuned, helical resonator. The tuned helical resonator prevents interference from outside the VHF FM band. The 121 receiver has taken full advantage of advances in a solid state technology by utilizing the latest semiconductors, ensuring reliable performance. As an example, the receiver discriminator features "AUTOLOCK," a circuit that locks the receiver's discriminator onto the transmitter frequency.

FRONT PANEL

The power on/off and meter function switch is located on the recessed front panel. This switch turns the receiver on and off and also controls which function of the receiver, the panel meter will monitor. The panel meter monitors RF carrier signal strength, internal battery condition and audio output. The headphone jack and volume control for the monitor amplifier are also located on the front panel. The monitor amplifier is separate and isolated from the line output amplifier and is capable of delivering .3 watts into an 8 ohm load. Directly beneath the on/off meter switch is a light emitting diode which is illuminated when the transmitter is turned on.

REAR PANEL

The rear panel is also recessed to protect the connectors when the unit is transported. The rear panel houses the AC power cord receptacle, receiver antenna input connector, squelch level adjust, D3M audio output connector, Mic/Line level switch, AC circuit breaker and the accessory connector. The Mic/Line level switch selects the balanced output level available at the D3M connector (pins 2 and 3) and the accessory connector (pins J and K). With the switch in the Line position, the audio output level equals 0 dBm (with 10 dB of headroom) when the VU meter indicates 0 VU. The output level in the Mic position is -52 dBm at 0 VU. The accessory connector also provides a diversity sense output on pin A, a regulated 7.5 volt DC at 100 milliamps on pin B and will accept external power for the receiver (plus 10 to 30 volts DC) on pin E, pin H is ground. The squelch level adjust is located beneath the Mic/Line switch. The squelch level is adjustable between .1 uV and 2 micro volts and is set at the factory to .8 uV. The receiver will operate from a rechargeable set of nickel-cadium batteries (optional). The internal battery holder is available separately and will accommodate alkaline batteries (ten, Type AA) for anyone wishing to use non-rechargeable batteries.

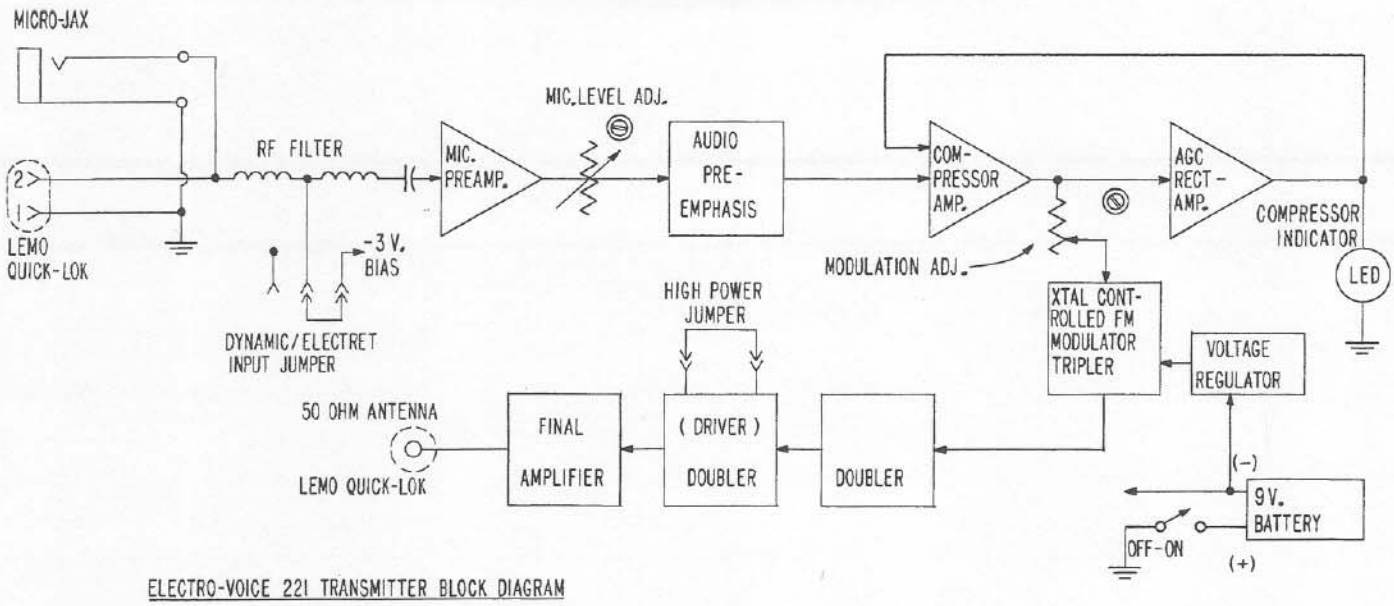

ELECTRO-VOICE 221 TRANSMITTER BLOCK DIAGRAM

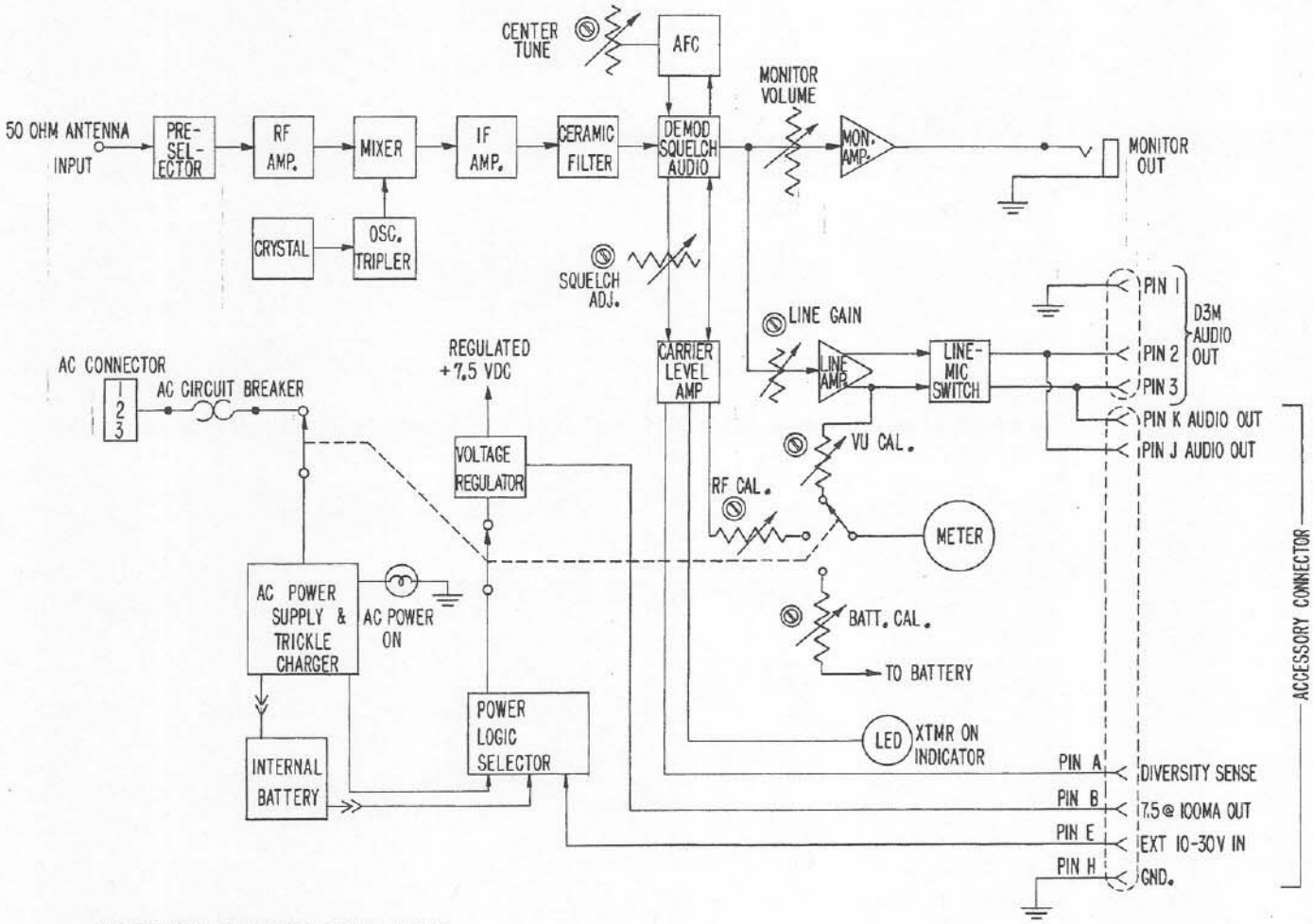

ELECTRO-VOICE 121 RECEIVER BLOCK DIAGRAM

ARCHITECTURAL SPECIFICATIONS

The wireless microphone system shall operate on the VHF high band (R.F. carrier frequencies nominally 150-210 MHz). The mode of transmission shall be FCC designator type 44F3. The microphone system shall have an overall frequency response of 100 Hz to 12 kHz ± 2 dB (6 dB down @ 50 Hz) and have a signal-to-noise ratio of at least 60 dB. The total harmonic distortion shall be less than 1%. The transmitter microphone input shall be switchable to accept a low impedance dynamic microphone or to accept and provide bias power for a miniature electret condenser microphone. The transmitter shall employ Lemo Quick-Lok type connectors for both antenna and microphone. A one-eighth inch diameter micro jack shall be paralleled electrically with the Quick-Lok microphone connector to ensure connector compatibility in the field. A compressor circuit in the transmitter shall have a minimum range of 40 dB and shall prevent overmodulation. The transmitter shall contain an internal modulation level indicator and a microphone level adjust, to allow optimum setting of the mic input sensitivity. The transmitter shall have 50/100 mw output power selection capability. The transmitter shall be self contained in a drawn aluminum housing with a baked enamel paint finish. Its dimensions excluding antenna shall not exceed 10.2 x 6.4 x 2 centimeters (4 x 2.5 x .8 inches). The receiver shall operate from either external AC power, external DC power or from an optional set of internal batteries. The receiver shall have a meter designed to monitor RF carrier level, audio level and internal battery condition. There shall be an LED on the front panel to indicate reception of the RF carrier. The monitor output of the receiver shall be adjustable and capable of delivering .3 watts into an 8 ohm load. The program audio output shall be capable of providing + 10 dBm, line level out and -42 dBm mic level out. The receiver shall have an accessory connector to provide a diversity sense output, a regulated 7.5 volt DC output and audio output in parallel with the audio connector and to accept a plus 10 to 30 volt DC external power. The receiver shall be contained in a formed aluminum housing with recessed front and rear panels for protection. The receiver dimensions shall be 17.8 x 14.6 x 7.6 centimeters (7.0 x 5.75 x 3.0 inches). The wireless mic system shall be an Electro-Voice Model 221/121. The Electro-Voice Model 221/121 wireless microphone system is specified.

WARRANTY (Limited) — Electro-Voice Radio Frequency Equipment Products are guaranteed for one year from date of original purchase against malfunction due to defects in workmanship and materials. If such malfunction occurs, the unit will be repaired or replaced (at our option) without charge for materials or labor if delivered prepaid to the proper Electro-Voice service facility. Unit will be returned prepaid. Warranty does not cover finish or appearance items or malfunction due to abuse or operation at other than specified conditions. Repair by other than Electro-Voice or its authorized service agencies will void this guarantee.

For shipping address and instructions on return of Electro-Voice products for repair and locations of authorized service agencies, please write: Professional Products Department, Electro-Voice, Inc., 600 Cecil Street, Buchanan, Michigan 49107 (Phone: 616/695-6831).

Electro-Voice also maintains complete facilities for non-warranty service.

Part Number 53051–608

a Gulton COMPANY **ELECTRO-VOICE, Inc., 600 CECIL ST., BUCHANAN, MICH. 49107**

MANUFACTURING PLANTS AT ■ BUCHANAN, MICH. ■ NEWPORT, TENN. ■ SEVIERVILLE, TENN. ■ GANANOQUE, ONT. ■ LITHO IN U.S.A.