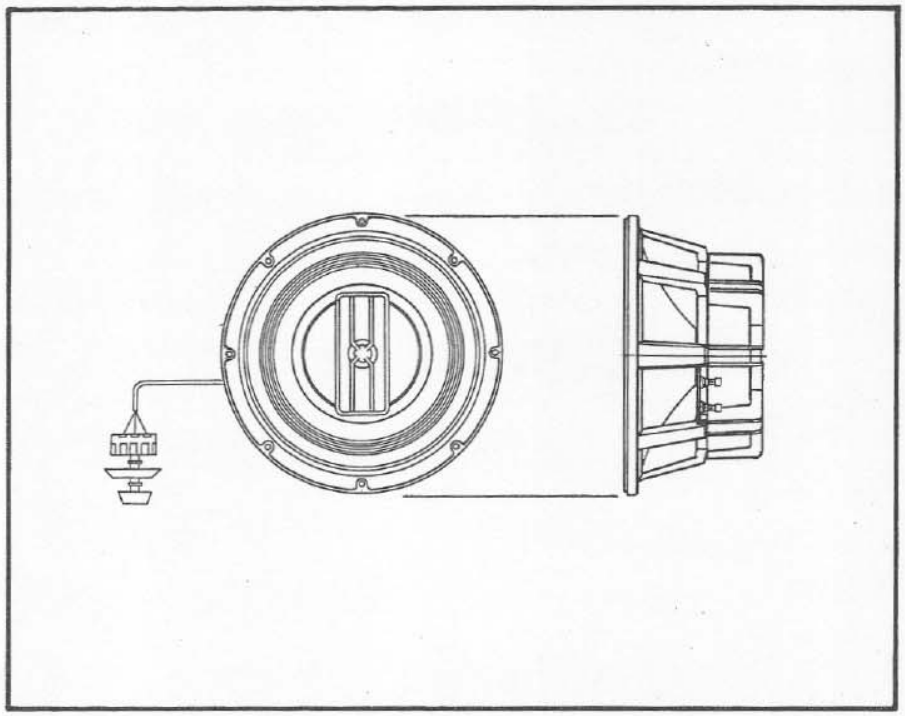

Electro-Voice®
a gulton company

12TRXC Integrated 3-Way Component Speaker

SPECIFICATIONS

Frequency Response in Recommended Vented Enclosure, 1 Meter on Axis, Half Space, Anechoic Environment, Swept One-Third Octave Random Noise, ± 6 dB
- 37-17,000 Hz

Low-Frequency Acoustic Power Output vs Frequency, Small Signal, in Recommended Vented Enclosure
- 3 dB Down – 43 Hz
- 10 dB Down – 32 Hz

Sound Pressure Level at 1 Meter, 1 Watt into Nominal Impedance, Anechoic Environment, 300-2,000 Hz
- Average – 100 dB

Power Handling Capacity, Less than 3,000 Hz
- Long-Term – 25 watts
- Short-Term – 250 watts
- (Less than 10 milliseconds)

Power Handling Capacity, Above 3,000 Hz
- Long-Term – 5 watts
- Short-Term – 50 watts

Half-Space Reference Efficiency
- 1.9%

Amplifier Power Requirements, Continuous Average at 8 Ohms, for the Following Average Sound Pressure Levels, Mid-Band, in the Reverberant Field of a Typical Living Room (R=200) with Peaks 10 dB above Average (Long-Term Average Power Capacity not to be Exceeded).
- Medium Level (85 dB SPL)
  - 0.66 watts
- Loud Level (95 dB SPL)
  - 6.6 watts
- Very Loud Level (105 dB SPL)
  - 66 watts
- Maximum Level (111 dB SPL)
  - 250 watts

Impedance
- Nominal – 8 ohms
- Minimum – 6.7 Ohms

Thiele-Small Driver Parameters Nominal (see Special Note on Low-Frequency Performance section)

f_S
Free-Air Resonance
- 50 Hz

Q_{ES}
Electro-Magnetic Q at f_S
- 0.75

Q_{MS}
Mechanical Q at f_S
- 5.9

Q_{TS}
Total Q at f_S $\left[\frac{Q_{ES}\ Q_{MS}}{Q_{ES} + Q_{MS}}\right]$
- 0.67

V_{AS}
Volume of Air Having Same Acoustic Compliance as Driver Suspension
- 5.9 ft^3

η_O
Half-Space Reference Efficiency
- 1.9%

V_D
Peak Displacement Volume of Diaphragm ($S_D X_{max}$)
- 10.8 in^3

S_D
Effective Diaphragm Area
- 83 in^2

X_{max}
Peak Linear Displacement of Diaphragm
- 0.13 in.

$P_{E(max)}$
Thermally Limited Maximum Input Power
- Below 3,000 Hz – 25 watts
- Above 3,000 Hz – 5 watts

Dimensions
- Voice Coil Diameter
  - Woofer – 2 in.
  - Tweeter – 1 in.
- Mounting Bolt Circle
  - 11-9/16 in
- Mounting Hole Diameter
  - 9/32 in.
- Mounting Holes
  - 8
- Baffle Hole Diameter
  - Front Mounting – 11-1/16
  - Rear Mounting – 10-15/16

Magnet Material – Ceramic

Magnet Weight
- Woofer – 22 oz
- Tweeter – 3.16 oz

Overall Diameter – 12-3/16 in.

Overall Depth – 6-1/8 in.

Net Weight – 11 lb 4 oz

ELECTRO VOICE COMPONENT SPEAKERS

Electro-Voice component speakers have traditionally provided the hobbyist and professional with the flexibility of custom installation as well as the opportunity for simple "building-block" system expansion and improvement. A comprehensive group of cone speakers, mid-frequency horns and drivers, horn tweeters, crossovers, and accessories is available. Additionally, all Electro-Voice component speakers offer conversion efficiencies substantially higher (3 to 8 dB) than typical "bookshelf" home speaker systems. This high efficiency is essential for most professional audio applications. In the home it permits accurate reproduction of the high sound levels of live music or, for more normal listening levels, the use of amazingly small amplifiers for satisfactory reproduction.

Electro-Voice cone speakers have now been thoroughly revised to reflect the latest knowledge of rational, optimized low-frequency speaker enclosure design. The result is a combination of extended low-distortion bass response, high efficiency, and modest cabinet size simply not available in other component speakers.

DESCRIPTION

The woofer portion of the 12TRXC is similar in construction and performance to the SP12C. It utilizes a rugged die-cast aluminum frame for maximum long-term stability — much more so than ordinary stamped frame speakers. It also uses a large ceramic magnet with an adequate magnetic circuit for maximum flux in the woofer gap and consequent high efficiency. A free edge cone is provided for improved mid-range performance. In addition, it incorporates a centrally mounted tweeter of the T35 type for maximum performance at frequencies above the normal range of human hearing. By using a horn type tweeter excellent dispersion for the higher frequencies is provided. This eliminates the problem of an apparent change in frequency response as one moves around the room. Thus, the sound will be essentially the same for all listeners regardless of their position. A "brilliance" control is provided to furnish adjustment of the tweeter level in order that unusual program material or listening situations may be accomodated.

RECOMMENDED ENCLOSURE

The 12TRXC has been designed for mounting in vented boxes appropriate to the speaker characteristics. The use of a vented box with its tuned feature complements the performance of the speaker and provides maximum low-frequency performance consistent with size and speaker parameters. A vented box not only increases the low-frequency output but also reduces distortion for a given sound level.

In the following list we have attempted to choose a typical vented box size that best complements the 12TRXC. Other vented box sizes and tunings are quite feasible and may give performance more suitable for a particular application. For further information please turn to the section of this sheet entitled: "Special Note on Low-Frequency Performance". If additional information is needed please ask for a copy of Bulletin 10B.

The low-frequency performance of a 12TRXC in a typical enclosure is listed below:

V_B	7 ft^3
f_B	43 Hz
f_3	43 Hz
f_{10}	32 Hz
f_{LL}	34 Hz

V_B Total volume of the enclosure not including volume displaced by bracing, port, or speaker. Variations of ± 10% are acceptable.

f_B Helmholtz resonance frequency of box-vent combination.

f_3 Frequency at which the small signal (normal listening level) acoustic power vs. frequency is down 3 dB relative to the mid-band output.

f_{10} Frequency at which the small signal (normal listening level) acoustic power vs. frequency is down 10 dB relative to the mid-band output.

f_{LL} Usable low-frequency limit, the frequency at which the large-signal maximum acoustic power output vs frequency is 10 dB below the maximum mid-band output (due to either thermal or displacement limitations)

An outline drawing of a typical enclosure is shown below.

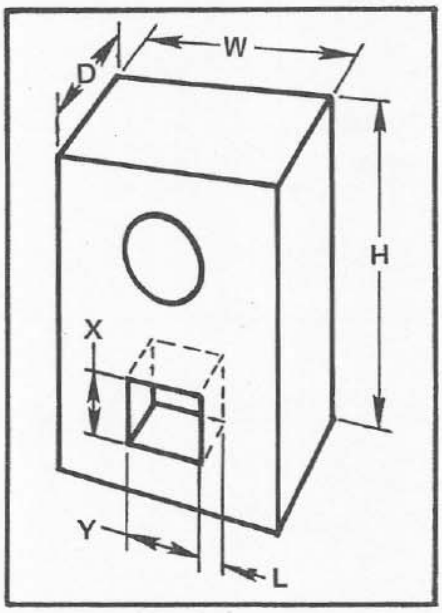

Dimensions for this enclosure are as follows:

Inside Height (H)	27¼ in.
Inside Width (W)	21½ in.
Inside Depth (D)	17¼ in.
Port Area (XY)	30.4 in^2
Port Depth (L)	3.4 in.

ENCLOSURE CONSTRUCTION

Speaker enclosures should be constructed of rigid materials such as void-free plywood or particle board. In general, 3/4-inch thick material is most satisfactory, although smaller enclosures (approximately 2 cubic feet and under) may be successfully constructed of 5/8-inch material. It is mandatory that the joints between the pieces of wood

be strong and well sealed. Simple butt joints secured with wood screws or nails and white glue are very satisfactory. Removable panels should be secured with wood screws and weather stripping tape. For joints longer than about 3 feet, internal glue blocks may be appropriate. In the largest boxes—greater than about 6 cubic feet—bracing is usually required for the largest expanses of wood to prevent sympathetic vibrations from affecting overall system performance. Proper bracing technique splits a rectangular panel into two equal rectangles with the brace placed along the panel's longest dimension. Good bracing materials are 2 X 2 dimension lumber or 4-inch widths of 3/4-inch plywood, placed on edge. Three mutually adjacent inside surfaces of the enclosure (top, one side and rear) should be lined with a one to two inch thickness of glass wool or similar acoustic absorptive material to prevent internal reflections from affecting mid-frequency performance. No absorptive material should be placed over or within the port.

The location of the speaker on the mounting baffle is relatively unimportant but close-to-ear-level mounting will provide best mid- and high-frequency performance in the listening room. The enclosure's height, width, and depth may be changed as long as (1) the internal volume remains the same (± 10%) and (2) extreme differences between any two dimensions are avoided. The required port area can be obtained by any convenient combination of width (Y) and height (X) as long as its long dimension is no more than five times the short dimension. The port is normally located on the front baffle board but may also be on any other box surface that has free access to the listening room. For most accurate box tuning the port should be no closer than several inches from the nearest adjacent enclosure wall. The port's proximity to the speaker is unimportant.

SPEAKER INSTALLATION AND HOOKUP

The 12TRXC may be installed either on the inside or outer surface of the mounting baffle. As with all quality speakers, care should be taken in mounting if best results are to be obtained. Drill the eight mounting holes and cut the mounting baffle opening in accordance with the dimensions given in the Specifications section. To mount the speaker at least four and preferably eight carriage bolts up to 9/32 inch in diameter may be used. Wood screws are not recommended for mounting the speaker. Secure the speaker to the baffle board just tightly enough to compress the speaker gasket. Excessive tightening is not necessary since the compressible gasket will form a satisfactory seal with only nominal pressure.

For best high frequency dispersion the 12TRXC should be mounted with the long axis of the tweeter vertical.

To avoid any significant amplifier power loss in the speaker lines and undesireable change in low-frequency response, wire size must be properly chosen. 18 gauge stranded wire (commonly called lamp or "zip" cord) is satisfactory for lengths up to 38 feet limiting the loss in sound output to an insignificant 0.5 dB. If longer speaker lines are required use progressively larger wire sizes: 16 gauge to 60 feet, 14 gauge to 96 feet and 12 gauge to 150 feet. These lengths assume an impedance level of one speaker or 8 ohms. Two speakers in parallel have an impedance of four ohms so if connected to the end of a single speaker line the lengths listed above must be halved. If it is desired to run the speaker line under a carpet, TV twin lead may be used for short distances.

SPECIAL NOTE ON LOW-FREQUENCY PERFORMANCE

The recommended enclosures and associated performance specifications displayed earlier were determined in accordance with the definitive analysis of A. N. Thiele, R. H. Small, and others. The performance of speakers in sealed enclosures (including acoustic suspension types) has been well understood for some time. In contrast, vented systems have been designed using not much more than cut-and-try methods with little real engineering know-how. However, the above mentioned analysis has changed this picture completely.

Thiele showed the similarity between a speaker in an enclosure and an electrical high-pass filter circuit. Application of well known filter analysis techniques led to quite accurate performance calculations for any speaker mounted in any vented or sealed cabinet. Moreover, it was shown that a properly executed speaker/vented-enclosure combination held clear-cut advantages over a sealed system in the areas of efficiency, box size, low-frequency limit, and distortion. These results make the choices of box size, low-frequency limit, efficiency, power-handling capacity, and maximum acoustic power output relatively easy to make. In fact, Thiele even presented in tabular form quite a number of possible vented box choices having optimum performance characteristics (see A. N. Thiele, "Loudspeakers in Vented Boxes: Part I" **J. Audio Eng. Soc.**, Vol. 19, May 1971, p.388).

By applying the work of Thiele and Small, Electro-Voice engineers developed a computer program which easily, quickly, and accurately predicts the performance of any speaker-box system in the frequency range where the diaphragm is acting as a simple piston. The upper limit for this operation is usually the frequency at which the diameter of the diaphragm becomes a large fraction of a wavelength.

The Thiele-Small Driver Parameters shown in the Specifications section include the speaker characteristics required by the computer program to develop the small and large signal performance of a given speaker and enclosure combination.

For more information on this subject, ask for Bulletin 10B. It includes additional vented enclosure recommendations for Electro-Voice component speakers and a detailed bibliography of the work of Thiele, Small, and others. Also, where the Thiele-Small Driver Parameters are known, Bulletin 10B shows how to choose the size and tuning of a vented enclosure and how to determine the low-frequency response of vented and sealed speaker systems using scientific pocket calculators.

WARRANTY (Limited) –
Electro-Voice High Fidelity Speakers and Accessories are guaranteed for five years from date of original purchase against malfunction due to defects in workmanship and materials. If such malfunction occurs, unit will be repaired or replaced (at our option) without charge for materials or labor if delivered prepaid to the proper Electro-Voice service facility. Unit will be returned prepaid. Warranty does not cover finish or appearance items or malfunction due to abuse or operation at other than specified conditions. Repair by other than Electro-Voice or its authorized service agencies will void this warranty.

For correct shipping address, instructions on return of Electro-Voice products for repair, and locations of authorized service agencies, please write: Service Department, Electro-Voice, Inc., 600 Cecil Street, Buchanan, Michigan 49107 (Phone: 616/695-6831).

Electro-Voice also maintains complete facilities for non-warranty service of E-V products.

Specifications subject to change without notice.

Part Number 53002–618
a Gulton COMPANY ELECTRO-VOICE, Inc., 600 CECIL ST., BUCHANAN, MICH. 49107
MANUFACTURING PLANTS AT ■ BUCHANAN, MICH. ■ NEWPORT, TENN. ■ SEVIERVILLE, TENN. ■ GANANOQUE, ONT. ■ LITHO IN U.S.A.