N/D468

N/DYM® Dynamic Supercardioid Instrumental Microphone

Key Features:

- **Designed specifically for musical instruments**
- **Flexible mechanical design for optimum positioning**
- **Supercardioid pattern for exceptional acoustic isolation and feedback rejection**
- **Accurate response, even in high sound pressure levels (SPL)**
- **Rugged steel construction for exceptional durability**

General Description:

Designed specifically for horns, drums, acoustical and electric guitars, the N/D468 provides a smooth, natural sound, capturing the excitement of the instrument. The supercardioid pattern provides superior rejection and acoustic isolation in any application. An innovative EV design harnesses the increased power of a neodymium based magnet design, allowing a large-diameter voice coil (up to 50% larger than other mics) for dynamic, efficient microphone performance. N/DYM® offers the power and clarity to “cut through the mix.” Whatever your instrument application the N/D468 is sure to be a top performer.

Operation

The low frequency response of the N/D468 microphone varies with the distance from the sound source. Known as “proximity effect,” maximum bass response is produced in “close-up” use with the microphone 1/4 inch from the sound source. Normal bass response is experienced with working distances greater than 24 inches. Working close to the microphone will produce a more robust sound. Close up positioning of the microphone will also reduce the potential for feedback from the sound reinforcement system. When close-miced, the bass-boost provides an increase in overall microphone output level. The mixer gain may be proportionately reduced, resulting in a reduction of the system’s sensitivity to feedback caused by sound entering the microphone from the loudspeakers.

Technical Specifications:

Element:	Dynamic N/DYM® magnet structure
Freq. Response, Close:	30 Hz - 22,000 Hz
Freq. Response, Far:	60 Hz - 22,000 Hz
Polar Pattern:	Supercardioid
Sensitivity, Open Circuit Voltage @ 1 kHz:	3.1 mV/pascal
Dynamic Range:	144 dB
Equivalent Output Noise:	14 dB A weighted (0 dB = 0.00002 pascal)
Polarity:	Positive pressure on diaphragm causes positive voltage on pin 2 ref. pin 3
Impedance:	350 ohms balanced (low-z)
Microphone Connector:	3-pin, XLR-type
Finish:	Non-reflecting black
Materials:	Memraflex™ grille screen
Accessories Included:	311 Stand Adapter Soft Zippered "Gig" Bag
Dimensions, Length: Diameter: Shank:	4.5" (115 mm) 2.05" (52 mm) 0.80" (20 mm)
Net Weight:	6.7oz (190 g)
Shipping Weight:	16 oz (453 g)

Frequency Response:

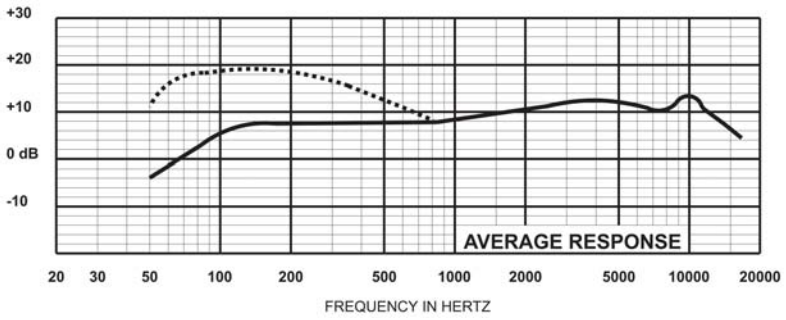

Polar Response:

(5 dB per division)
—— 1000 Hz

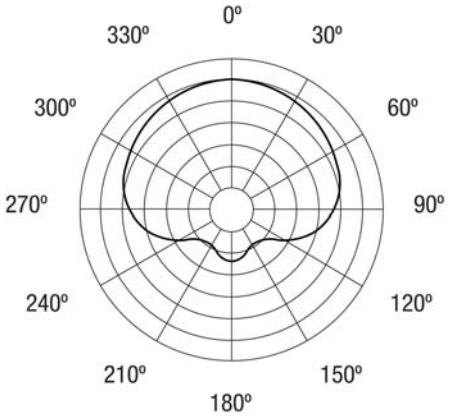

Microphone Use and Placement

Please note that micing techniques are a matter of personal preference. These are merely guidelines to assist in the placement of the microphone to gain optimal performance.

Usage	Optimal Placement
Electric Guitar and Bass Guitar Amplifier	Place microphone approximately 1-2" from and at a 90° degree angle to the speaker cone. To reduce boominess, move the microphone off axis to the cone from 90° to 45°, or move mic from center of cone to either edge.
Tom-Toms	On double headed Toms place mic over the top of drum 1-3" and at a 45° angle to the drum surface and 1-2" in from the drum edge. On single headed Toms use above method or place mic inside Tom from underneath at a 90° angle from the center of head, 3-5", away.
Snare Drum	Place mic 1-3" above the heads, 1-2" in from the rim. Aim each mic at the top heads angled down about 45°. If the drum rings, tape deadening material to the head or use damping rings. For more “snare” sound place a 2nd mic underneath aimed up at the bottom of head.
Cymbals	Place microphone one to two feet above the top of cymbals.
High-Hat	Place 5 inches above outside edge at a 45° down angle.
Brass	6-24" away, and on axis with the bell of the instrument.
Acoustic Guitar	Place mic 6-12" from where finger board joins the body.

Instrumental Microphone Standard Placement & Use Guidelines

1. Always point the microphone at the desired source of sound, and away from any unwanted sources.

2.The microphone should be located close to the sound source to minimize interference from other potential sound sources.

3. Use the 3-to-1 rule when using multiple microphones. Place each microphone three times farther from other microphones as from the desired sound source.

4. Minimize over-handling of the microphone to reduce unwanted mechanical noise.

5.Working close to the microphone will increase the bass tone and also provide increased gain-before-feedback.

N/D468 Part Number: 16043008

Electro-Voice®

12000 Portland Avenue South, Burnsville, MN 55337
Phone: 952/884-4051, Fax: 952/884-0043
www.electrovoice.com

© Telex Communications, Inc. 5/2007

Part Number 38109-831 Rev. D

U.S.A. and Canada only. For customer orders, contact Customer Service at:
800/392-3497 Fax: 800/955-6831
Europe, Africa, and Middle East only. For customer orders, contact Customer Service at:
+ 49 9421-706 0 Fax: + 49 9421-706 265
Other International locations. For customer orders, contact Customer Service at:
+ 1 952 884-4051 Fax: + 1 952 736-4212
For warranty repair or service information, contact the Service Repair department at:
800/553-5992 or 402/467-5321
For technical assistance, contact Technical Support at:
800/392-3497 or 952/736-4656

Specifications subject to change without notice.